ZF 4HP22-24EH Ver 20.1

File Name: 4HP24 Wiring Diagram Ver 20.1
Harness Required: G05 & G10
Last Changed: 05/03/2014

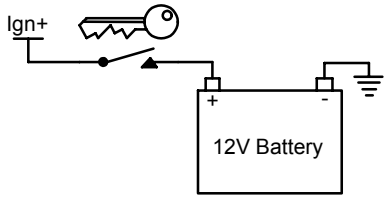

NC - Not Connected
Ign+ Ignition Power
Earth
Terminal Connections with the same name are tied together

Led's Functions
Yellow - Power
Green - Diagnostic

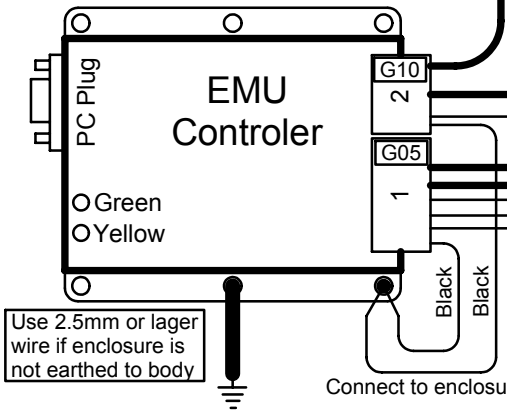

Use 2.5mm or lager wire if enclosure is not earthed to body

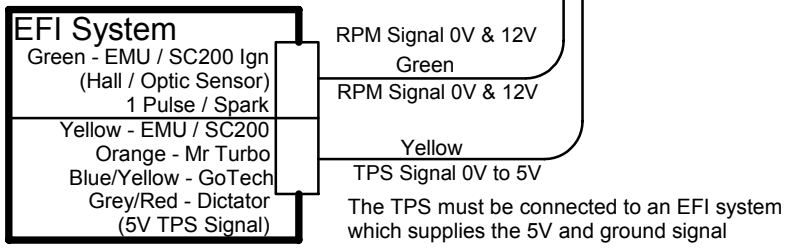

The TPS must be connected to an EFI system which supplies the 5V and ground signal

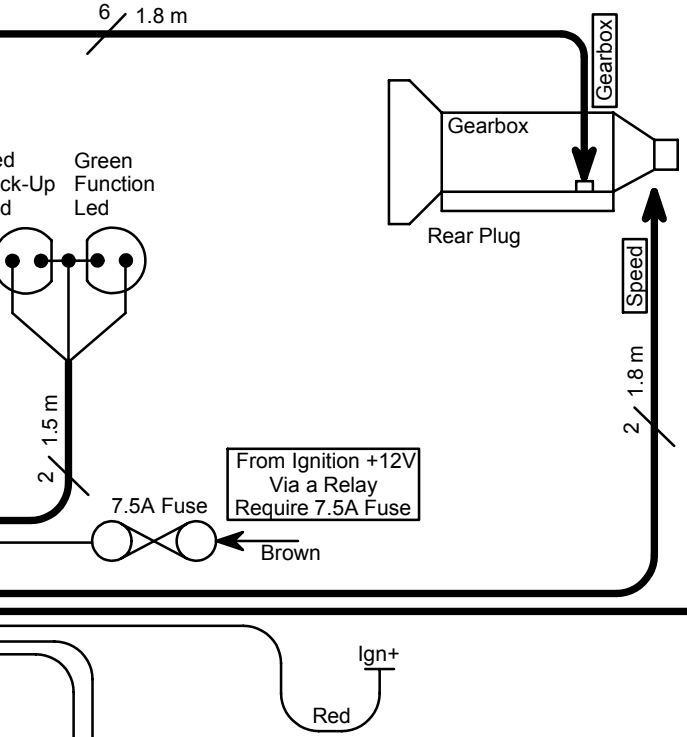

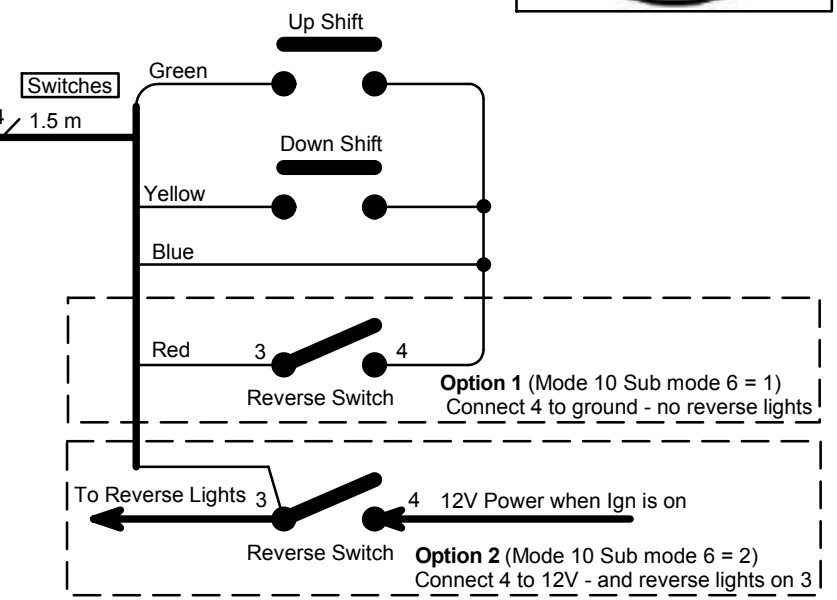

4HP	TCU	Harness+Color	Resistance Cold-Hot	
H	3	Gearbox Red	25 - 46	Ohm
K	8	Gearbox Yellow	25 - 46	Ohm
D	2	Gearbox White	25 - 46	Ohm
L	6	Gearbox Green	25 - 46	Ohm
B	1	Gearbox Blue	1.8 - 4.6	Ohm
F	Magnetic Speed Sensor			
E	Magnetic Speed Sensor			
M	Earth - Casing			

Harness Pin View

1.	Blue	Gearbox
2.	White	Gearbox
3.	Red	Gearbox
4.	NC	
5.	Blue	Green Mode LED +
6.	Green	Gearbox
7.	Black	Gearbox
8.	Yellow	Gearbox
9.	Brown	+12V Relay Supply
10.	Red	Red Lock-Up LED +

Harness Pin View

1.	Yellow	Down Shift Button
2.	Yellow	TPS Signal 0V to 5V
3.		
4.		
5.		
6.	Green	RPM Pulse
7.	Green	Up Shift Button
8.	Red	Reverse Switch
9.	Blue	+5V Out
10.	Red	+12V Supply In
11.	Red	Speed Sensor
12.		
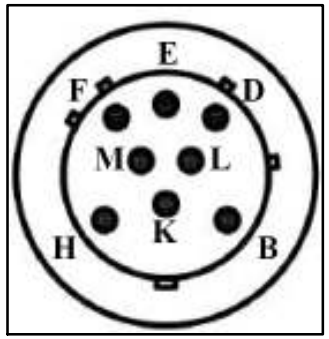
Harness Connector Pin View